

Product & Installation Manual

wavin OSMA

Hep$_v$O

www.wavin.co.uk

Contents

Wavin Osma Hep$_v$O Hygienic Self-Sealing Waste Valve 3

Clean air for healthy living 4

Introduction to Hep$_v$O 5

Hep$_v$O System Benefits 6

Water Seal Weaknesses 7

Hep$_v$O application areas

1. Replacement for water traps 8
2. Branch pipe ventilation 2
3. Recreational vehicles 10
4. Hot climates 10
5. Unvented hot water storage systems 11
6. Management of Condensate Drainage 12

Hep$_v$O Installation ..... 12 - 15

Testing and Maintenance 16

Product Selector 17

Product Detail 18

General Information 19

wavin OSMA

Hep$_v$O Hygienic Self-Sealing Waste Valve

It won't dry out!
It won't gurgle!
It won't let you down...

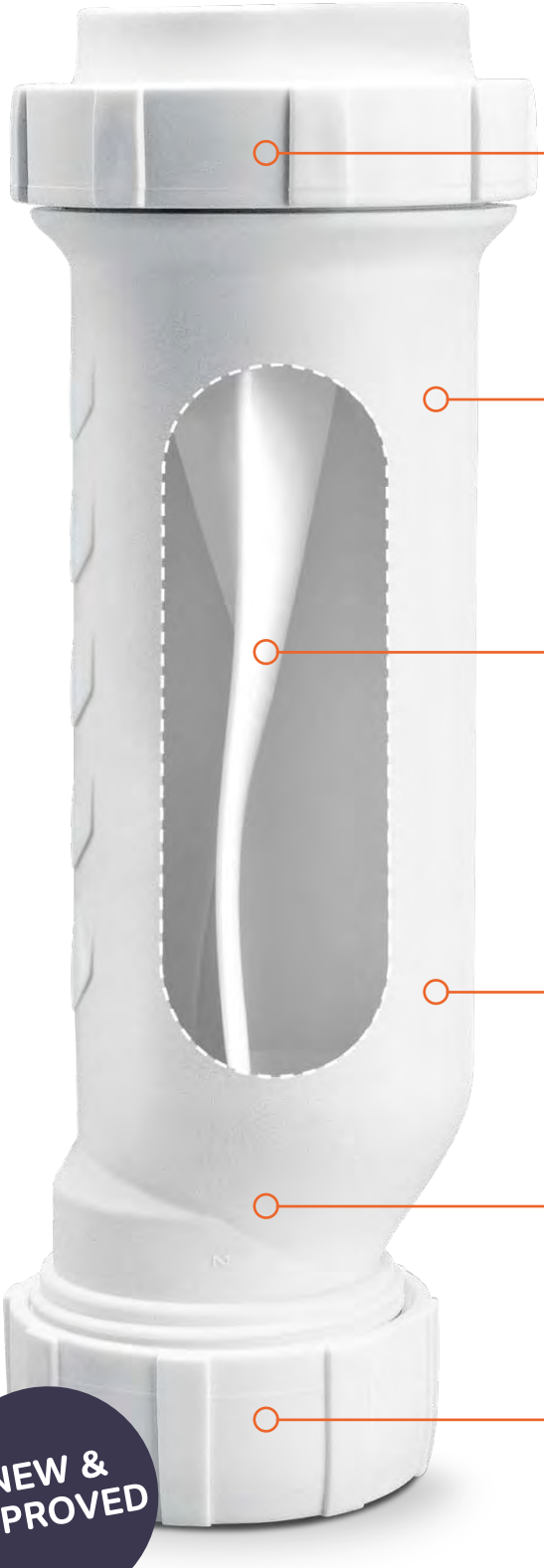

Direction of flow arrows

NEW & IMPROVED

Connects to 1¼" and 1½" BSP thread.

15 YEAR GUARANTEE

Ideal for installation in confined areas and can be installed either horizontally or vertically.



Elastomeric membrane prevents foul sewer air from entering the building.

Silent operation, no gurgling.

Smooth bore prevents blockages and risk of stagnating solids.

Hep$_v$O Outlet provided with a universal compression connection, designed for use with PP, ABS, or PVC-C pipe.

Clean air for healthy living

Sewer gases can be harmful to our health and wellbeing. As a dry-sealing valve that utilises a purpose designed membrane, Hep_vO helps to prevent sewer gas entering the living space. The self-sealing valve opens under the water pressure of a fixture emptying, and closes to form a tight seal after the fixture has discharged. With this airtight seal between living spaces and drainage systems, Hep_vO ensures cleaner and healthier breathing air.



Introducing the new and improved Hep$_V$O Hygienic Self-Sealing Waste Valve

The first plumbing water trap was invented by Alexander Cummings in 1775. Although there have been variations over time, it remained largely unchanged for over 200 years... until Hep$_V$O from Wavin came along.

The revolutionary Hep$_V$O waterless trap was the first of its kind and millions have now been installed world-wide.

This new sleeker version of the world's first and best sellingwaterless trap comes complete with a 15 year guarantee. With the same proven seal and now featuring direction of flow arrows, it's even easier to install and is maintenance free.

The Hep$_V$O valve does everything you'd expect from a conventional water-trap but without any of the hassles or problems that can be associated with traditional systems.



Outstanding performance

Sometimes conventional water-traps can lose their seal due to evaporation, siphonage, leaking or movement. But unlike a typical trap, Hep$_V$O uses a self-sealing, elastomeric membrane which performs exactly the same function as a water-trap – but without the risk of evaporation, siphonage or leaking due to movement.

Hep$_V$O has been extensively tested and is resistant to common chemicals such as cleaners and detergents containing sodium hydroxide and solvents.

Hep$_V$O is a self-sealing waste valve that prevents the escape of foul sewer air from waste discharge systems, and actively maintains the pressure equilibrium in soil and waste installations. As a dry sealing valve, Hep$_V$O utilises a purpose designed membrane to create an airtight seal between the living space and the drainage system. The self-sealing valve opens under the water pressure of an appliance emptying and closes to form a tight seal after the appliance has discharged under normal atmospheric conditions.





Membrane opens and closes, to prevent foul sewer odour from returning.



Direction of flow arrows

Hep$_v$O System Benefits

The Hep$_v$O dry self-sealing valve offers a number of benefits for both the professional installer and end user of the product. In addition, Hep$_v$O offers considerable benefits for the system designer. See the application section of this document for further information.

Permanent odour prevention

The Hep$_v$O valve promotes hygiene, particularly where an appliance is infrequently used. Hep$_v$O differs from conventional traps, which can dry out or hold water which can become stagnant causing the emission of smells and enhancing bacterial growth – see Fig 1

Unaffected by siphonage

The Hep$_v$O valve results in enhanced plumbing design and system efficiency. Unlike water seal traps, Hep$_v$O is not affected by siphonage and will therefore not allow the escape of foul air into the living space from drain or sewer.

Resistance to back pressure

The Hep$_v$O valve will perform under back pressures which are 10 times greater than those experienced in a typical soil and waste system.

Space saving

Hep$_v$O allows the placement of a greater number of appliances together on fewer discharge pipes without compromising the performance of the sanitary discharge system.

No branch air admittance valves required

Hep$_v$O actively eliminates negative pressure within the waste system by opening and allowing in fresh air until a state of equilibrium with atmosphere is reached. It subsequently closes to reseal the waste system and prevent foul air release. This means that the venting of the waste system, or the inclusion of an air admittance valve in the waste system, is no longer necessary.

Unaffected by solid or greasy materials

Even when hot or cold fats are released into it, a Hep$_v$O valve continues to perform. In comparative tests with conventional traps, a solid plug of fat forms within the trap as the fat comes into contact with the cold water held in the trap. The flexibility of the Hep$_v$O valve seal prevents the accumulation of limescale.

Low noise

Hep$_v$O operates silently and is not subject to “gurgling” noises typically associated with siphonage and indicative of a breech in the water seal barrier. Independent tests confirm that Hep$_v$O performs silently when subjected to a range of abnormal pressures.

Higher flow rate of discharge water

Hep$_v$O allows discharge water to pass easily through, regardless of the volume. The flexibility of the Hep$_v$O valve seal prevents the accumulation of limescale.

Fig 1.

Water held in conventional traps can become stagnant

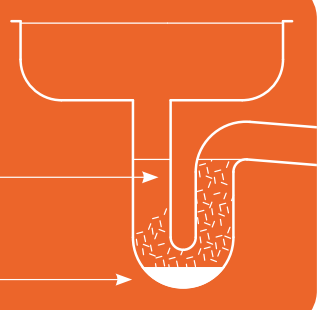



Water Seal Weaknesses

Conventional waste traps work by having a water seal to prevent foul odours from entering buildings. However, a water trap can fail under a number of conditions. The following diagrams show several problems that result in loss of water seal, gurgling and foul smells. In summary, Hep$_v$O will not fail under any of the conditions shown below in Fig 2.

Fig 2.
Ten potential reasons for trap failure

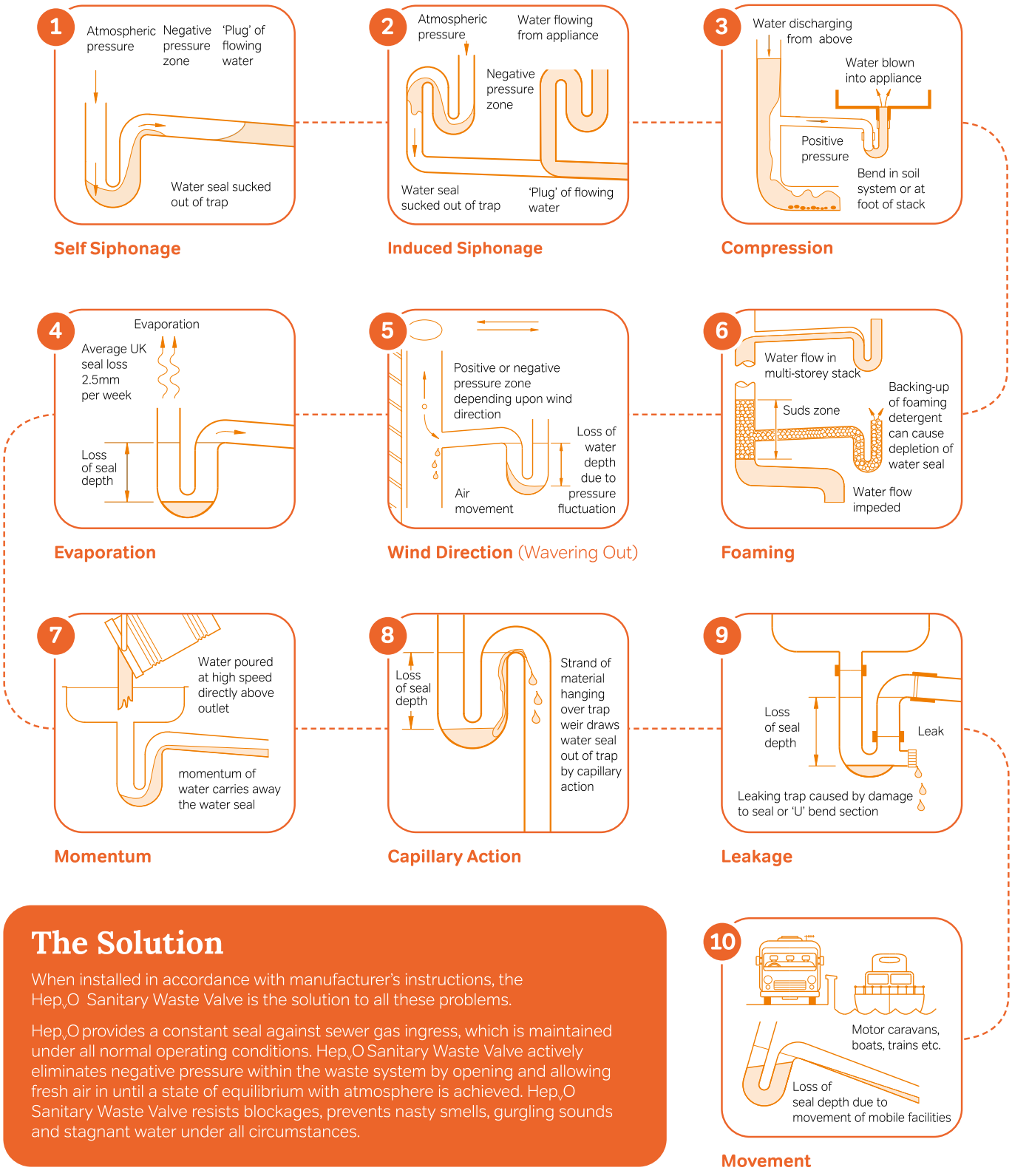

The Solution

When installed in accordance with manufacturer's instructions, the Hep$_v$O Sanitary Waste Valve is the solution to all these problems.

Hep$_v$O provides a constant seal against sewer gas ingress, which is maintained under all normal operating conditions. Hep$_v$O Sanitary Waste Valve actively eliminates negative pressure within the waste system by opening and allowing fresh air in until a state of equilibrium with atmosphere is achieved. Hep$_v$O Sanitary Waste Valve resists blockages, prevents nasty smells, gurgling sounds and stagnant water under all circumstances.

Hep$_v$O application areas

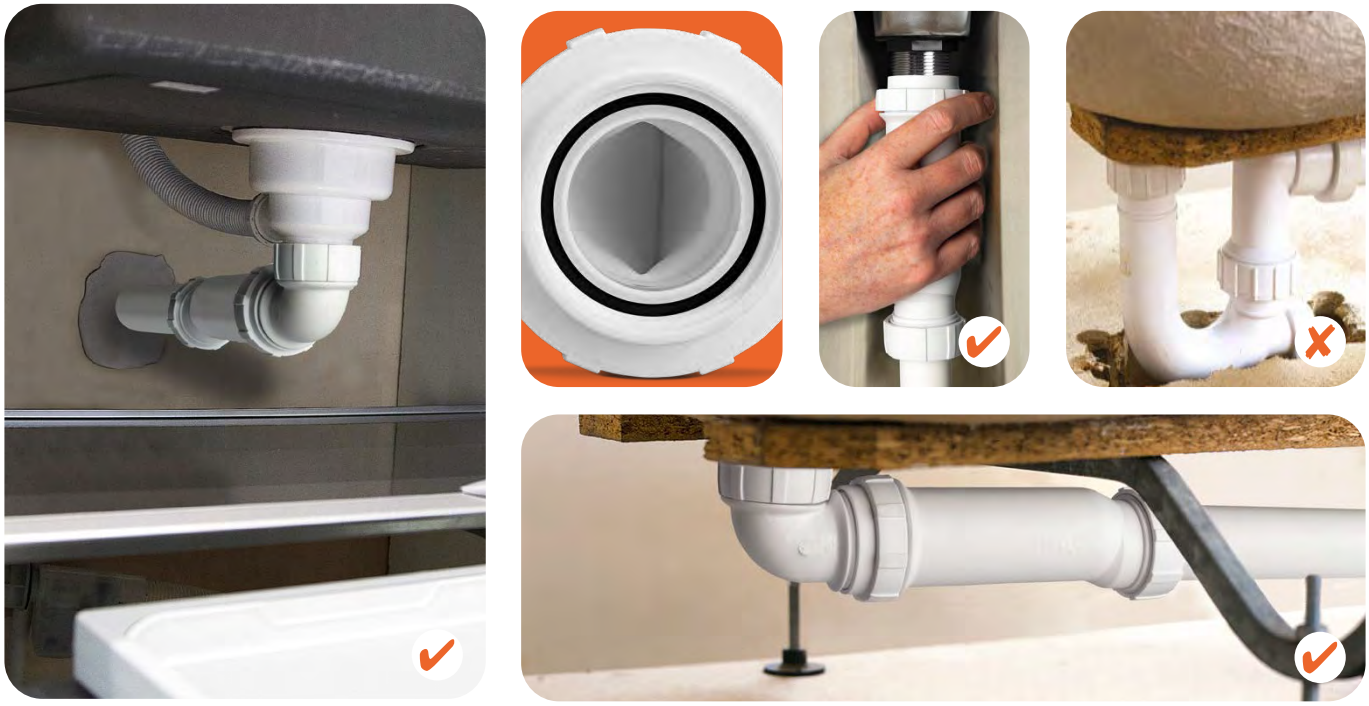

The Hep$_v$O self-sealing waterless waste valve is suitable for use in the following application areas:

1 As a replacement for water traps in waste drainage

Hep$_v$O can be a more effective alternative for traditional waste traps on any waste appliance and on all types of sanitary systems such as primary ventilated systems (single stack) and secondary ventilated systems, stub stacks, and where appliances connect to a gully.

It's sleek design and ability to install vertically or horizontally delivers space saving opportunities, time saving (as system design can be simplified) and cost saving benefits.

Space Saving

- Where required, the waste pipe can drop in a straight line from the appliance outlet which means that installation access for slimline pedestals is significantly enhanced.
- For kitchen sinks, installing Hep$_v$O can open up the cupboard space below the sink; particularly an issue when homeowners require integrated waste bins. See fig 3.
- Hep$_v$O can be installed horizontally by using the 90° adaptor, which avoids cutting the floor under baths and showers to accommodate the 'U' bend of a trap.

See WRc Technical Note TN10317 for further information.

Fig 3:
Space saving capabilities under a kitchen sink

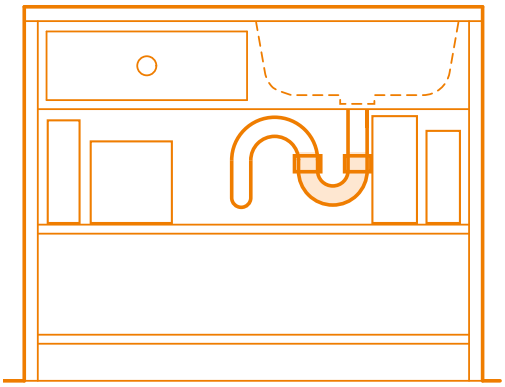

Sink cupboard with water seal trap

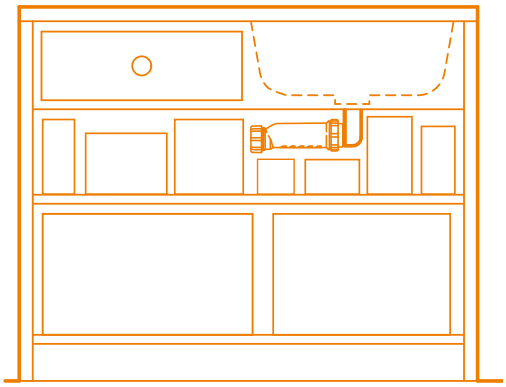

Sink cupboard with HepvO installed horizontally

2

For branch pipe ventilation

Hep$_V$O can act as an air admittance valve, allowing air into the drainage system when negative pressure occurs. Once equilibrium is reached the valve closes. Using the valve as an air admittance tool provides cost savings, as it eliminates the need for a traditional open vent pipe or an air admittance valve to be positioned on the stack in certain circumstances; simplifies system design, **providing space and time saving benefits.**

The use of Hep$_V$O, as it provides ventilation, can give more flexibility in pipe sizing, allowing the pipe run to be extended to 3m without needing to increase pipe size from 32mm to 40mm if going beyond 1.7m – see Fig 5.

For non-domestic situations, the use of multiple Hep$_V$O valves allows for simpler systems with less pipework & straight runs – see Fig 4.

On completion of the installation, there is no need to perform self siphonage and induced siphonage tests for branch discharge pipes from waste appliances.

Figure 4.
Schematic view for three basins

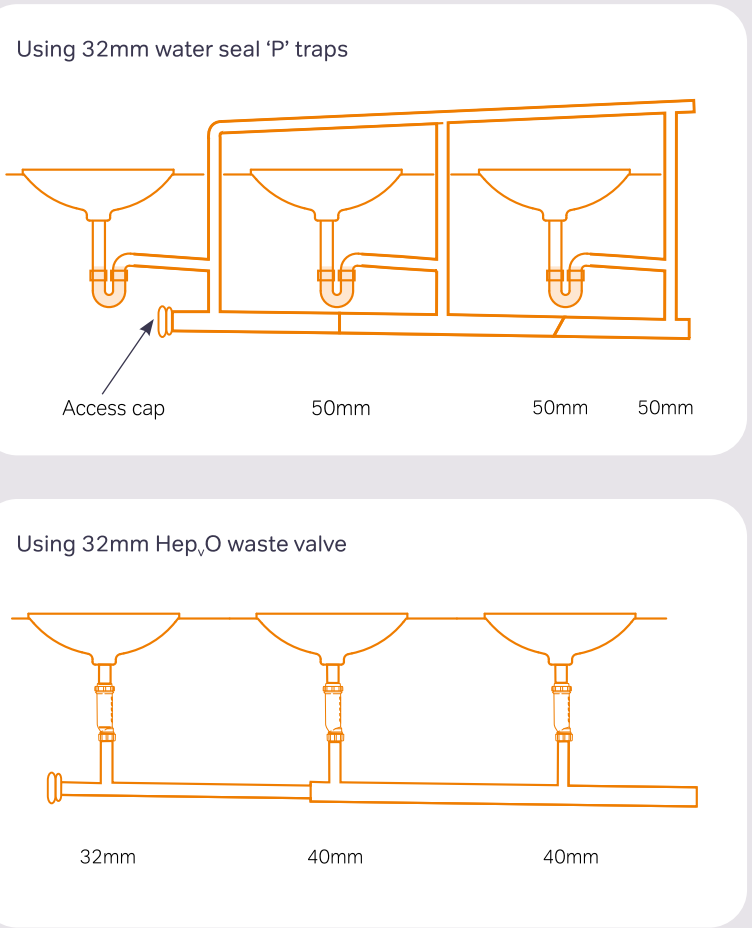

Fig 5.
Schematic view for extended pipe run
See WRc Technical Note TN10318 for further information on this application area

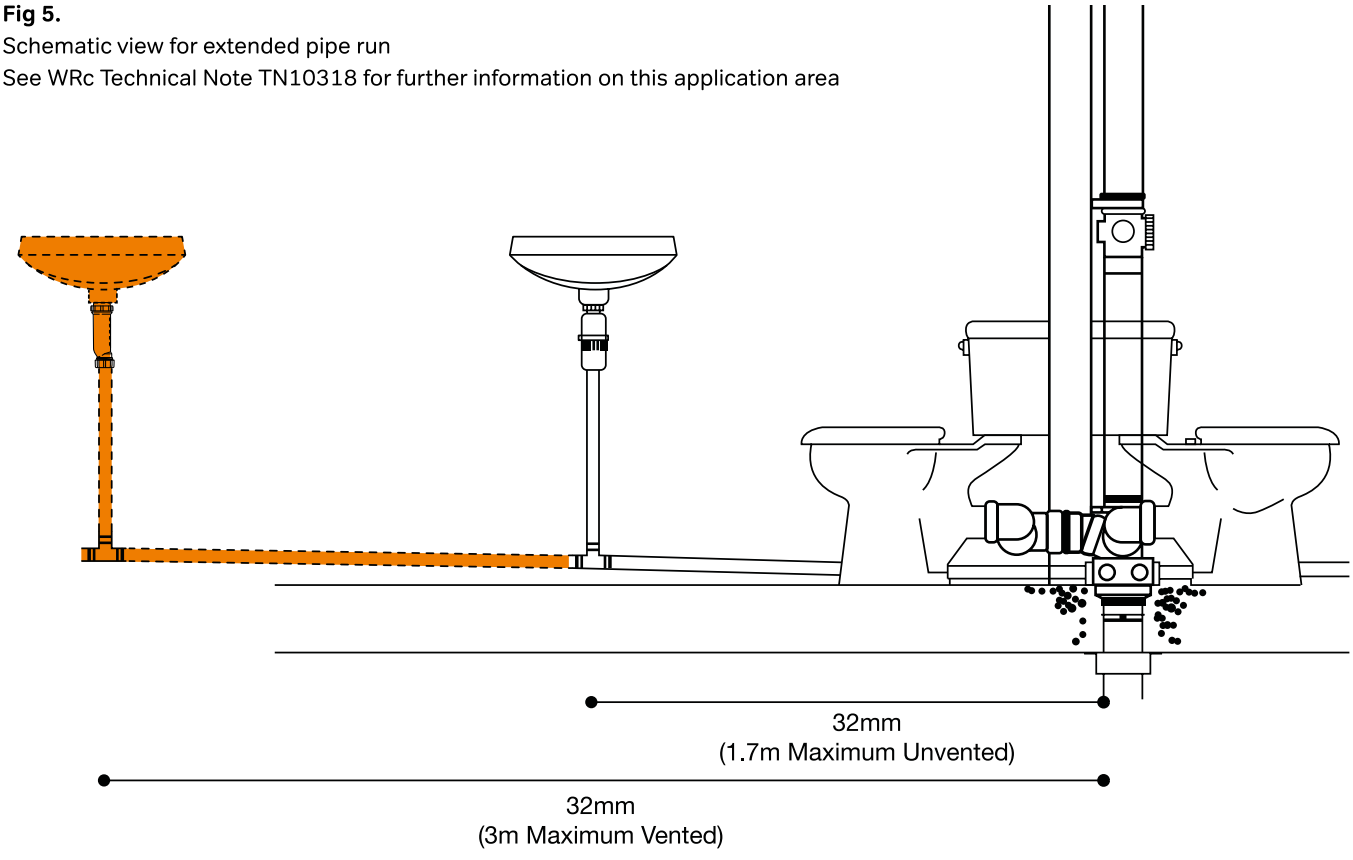

Hep$_v$O application areas

3



Recreational vehicles - such as boats, caravans, etc.

Hep$_v$O works perfectly in any kind of home. Because Hep$_v$O is a waterless trap system, it performs successfully in motor homes and other moving vehicles - such as boats and caravans - where water traps can lose their seal through movement and vibration.

The use of Hep$_v$O waterless trap also avoids a problem of the water seal freezing, and evaporation of water seal in warm weather or extended periods of non-use which would lead to odours escaping into the vehicle.

See Fig 2. No.4 & No.10 on page 7 and WRc Technical Note TN10319 for further information on this application area.

4



For hot climates or where appliances are used infrequently.

Because Hep$_v$O is a waterless trap system, it's great to use in situations of infrequent use, including holiday lets; guest bathrooms, park homes and recreational vehicles.

If the appliance is not used for an extended period, evaporation of water in the traditional water trap will lead to a loss of the water seal. In hot climates, with a higher risk of rapid water evaporation, this can be a particular problem, leading to odours escaping into the buildings after a relatively short period of time. Deeper water seals traps could be used, but they would require more space close to the appliance, so the Hep$_v$O waterless trap with its slimline design, is an ideal alternative in this situation.

See Fig 4 on page 7 and WRc Technical Note TN10320 for further information on this application area.

5 Drainage from unvented hot water storage systems

Hep$_V$O can be used with an unvented hot water storage system to connect a tundish outlet pipe to a drainage stack. This stops the emission of foul air from drainage systems into premises.

Using the Hep$_V$O tundish adaptor kit, the connection from unvented hot water discharge appliances to soil stacks is simplified in systems with a temperature and pressure valve of no more than 22mm. The kit reduces the number of fittings required, eliminating the need for a running adaptor.

The Hep$_V$O valve may also be used in condensate piping from high efficiency boilers and air conditioning units discharging to sanitary pipework.



Fig 6
Self-sealing valve when used with a combined temperature and pressure relief valve for unvented hot water storage system.

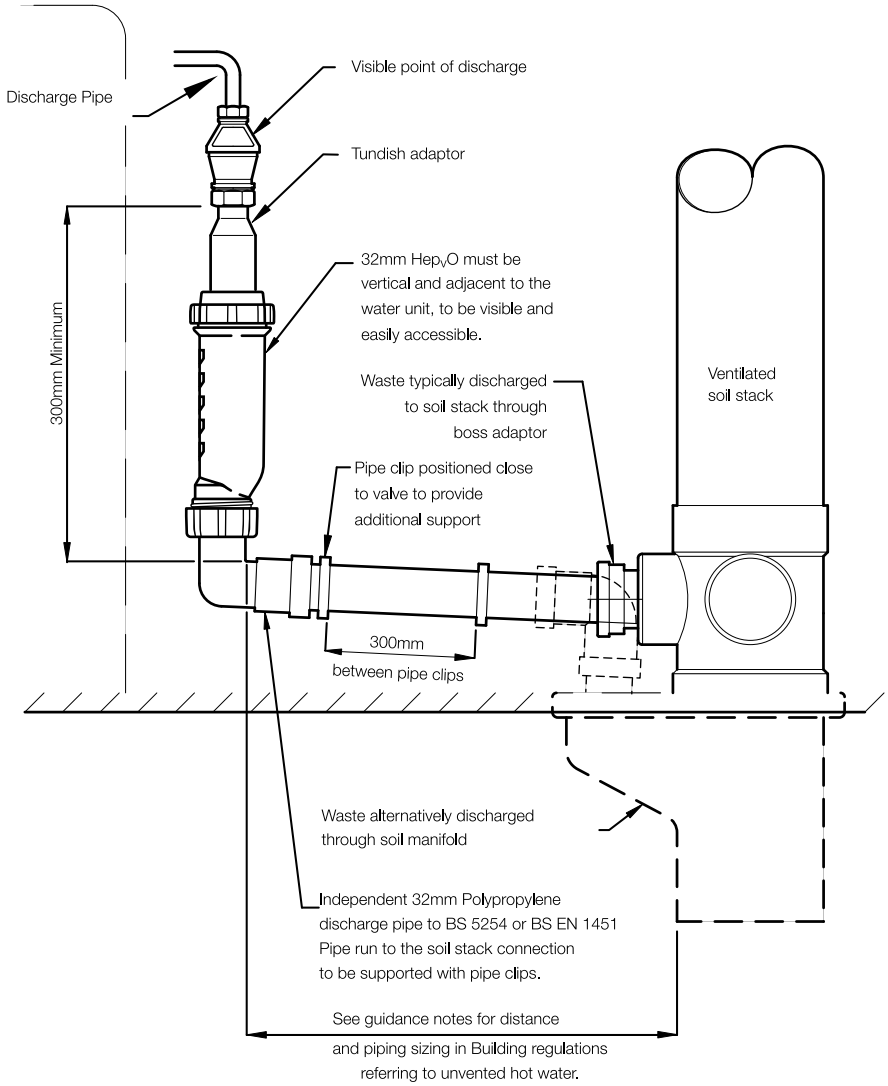

Note:
- This application is not recommended for combi or sealed boiler systems.
- Hep$_V$O should not be used for uncontrolled high temperature discharges such as from pressure-only relief valves (i.e. not incorporating a temperature relief valve).

See WRc Technical Note TN10321 and fitting instructions for further information on this application area.

Download from www.wavin.co.uk

Scan the QR code

Hep$_v$O application areas



6 Management of Condensate Drainage using Hep$_v$O Waste Valves

The HepvO valve may also be used in condensate piping from high efficiency boilers and air conditioning units discharging to sanitary pipework.

HepvO can also be used in a system with under pressure HVAC equipment including the following: Drainage from Airconditioning, Mechanical Ventilation and Heat Recovery (MVHR) & Dehumidifiers.

In HVAC installations, Hep$_v$O can only be used in underpressure systems:

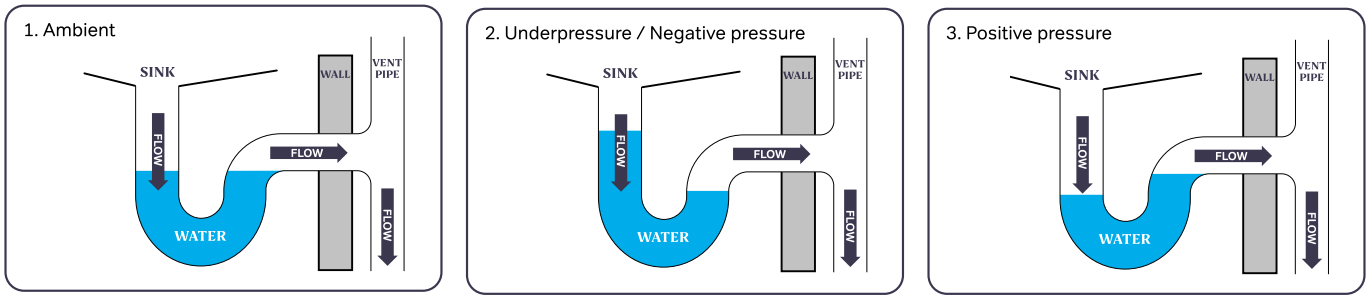

The design of HepvO makes it particularly suitable to use in Air conditioners, Mechanical Ventilation, Heat Recovery (MVHR) & Dehumidifiers where low flow of wastewater or indeed no flow may occur. The design and operation of the HepvO is not compromised in these situations which would render a water trap inoperable.

Condensate Drain

The unit's Condensation drainpipe must be fitted and connected to the dwelling's foul water drainage system in accordance with the relevant building regulations. HepvO can be installed horizontally or vertically. For maximum space saving, horizontal installation is usually preferred.

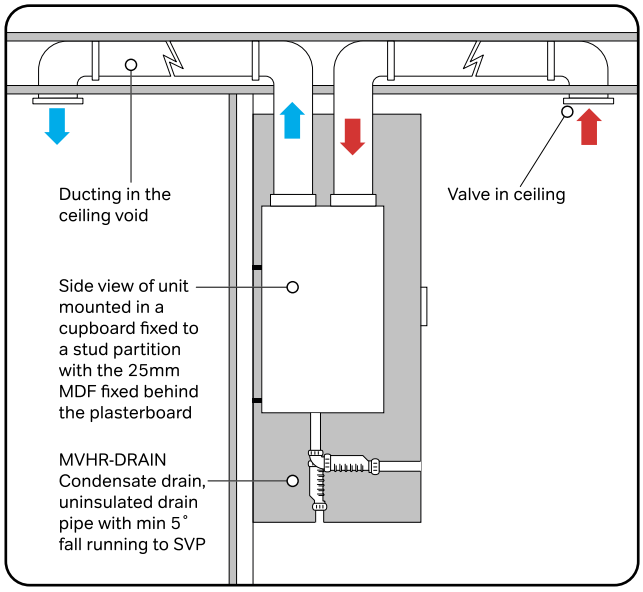

Hep$_v$O Installations

HepvO is designed to connect directly to a 1¼" (32mm valve) or 1½" (40mm valve) male thread. Angled adaptors are available for horizontal installations and running adaptors are available to accept incoming pipe.

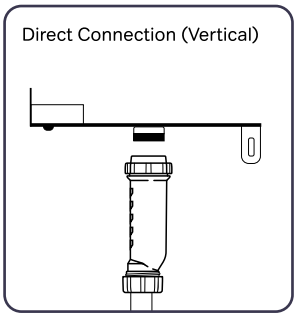

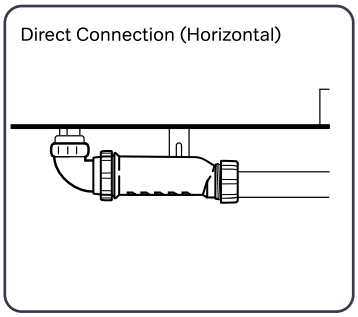

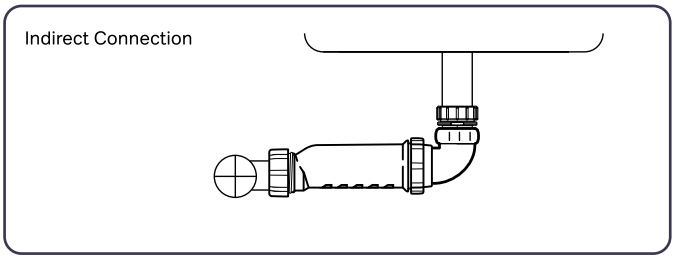

The Condensate Drain

- Must be insulated if any part of the pipe passes through an unheated void or a space which could fall below 4°C to prevent freezing of the condensate.
- Must be installed to have a fall in accordance with local waste pipe fall regulations. Wavin angled adaptors are designed for this purpose and feature an angle of 2.5°
- In these applications it is recommended to use a Hep$_V$O self-sealing plastic waste valve, which is a diaphragm type waste valve, in place of a conventional water U or P trap which could dry out in these situations. A dried-out P trap will allow a significant volume of contaminated air into the living space of the building, particularly where negative pressure is present. Contaminated air and droplets of condensation can also enter the HVAC fan and impair the performance and hygiene of the unit, for instance through mould growth.

Hep$_V$O Performance Tests

Test Description
A number of tests were performed with the apparatus shown over a range of negative pressures. Adjustments were made to the vacuum pump controls to change the vacuum level in the system and produce the following conditions:-

- -1.2kPa (12cm / 4.7” water column)
- -2.6kPa (26cm / 10.2” water column)
- -4.3kPa (43cm /16.9” water column)

The vertical water column is visible in Image B below and was maintained without leakage at each of the negative test pressures.

The results demonstrate that the Hep$_V$O valve positioned in the lower corner of the image was completely airtight over the range of negative test pressures. The valve in this arrangement is closed and no air is admitted from the outlet of the unit. Once the negative pressure in the vertical column above the valve inlet is removed the water in the column passes through the valve outlet to waste.

The conclusion of these tests is that the Hep$_V$O valve is perfectly suitable as an air lock for condensate drainage of heat recovery units and other applications generating condensate under negative pressures to a level of -4kPa.

Example pipework calculation
It is recommended that the vertical distance from the valve and the condensate tray is based on the operating pressure of the fan. This is a value of the fan pressure in mm vacuum +10% +10mm.

Hence for a 600Pa static pressure fan, the minimum vertical distance would be 60mm + 10% + 10mm = 76mm below the condensate tray. The construction of the HVAC unit may already accommodate all or part of the required head, so it is recommended that you check the construction of the unit with the manufacturer. Also, please note that 40mm of the required head is already accommodated within the body of the Hep$_V$O valve. (see diagram Fig 7).

Image A



Image B



Fig 7
Hep$_V$O valve

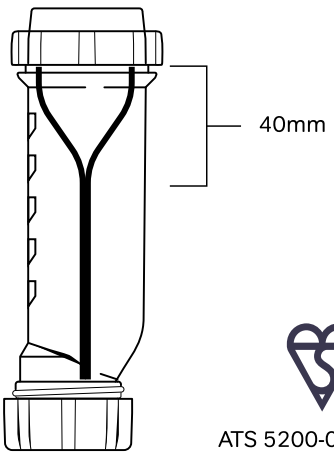

ATS 5200-047:2005

Hep$_v$O Installation

Hep$_v$O should be installed in accordance with the instructions given here.

Orientation

When fixed horizontally to an appliance outlet or to a sloping pipe Hep$_v$O must be installed with the directional arrows underneath – Fig 8. This prevents standing water and provides a continuous fall.

Fig 8

When installed horizontally the arrows must be underneath and point in the direction of flow to ensure correct operation.

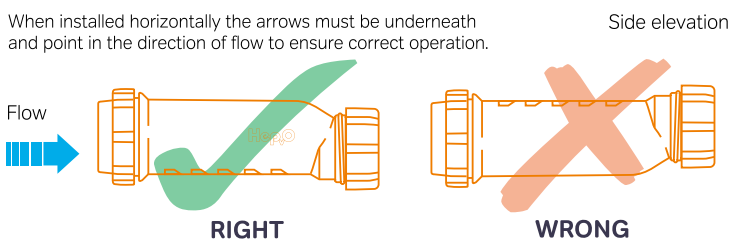

Hep$_v$O inlet

The inlet is provided with a captive nut and sealing ring, designed to connect to waste fittings conforming to BS EN 274, or to a HepvO inlet adaptor.

Hep$_v$O outlet

The outlet is provided with a universal compression connection which is designed for use with BS EN 1451-1/ BS 5254 polypropylene pipe, BS EN 1455-1 ABS pipe, BS EN 1566-1 PVC-C pipe or BS EN 1057/ BS 659 copper pipe.

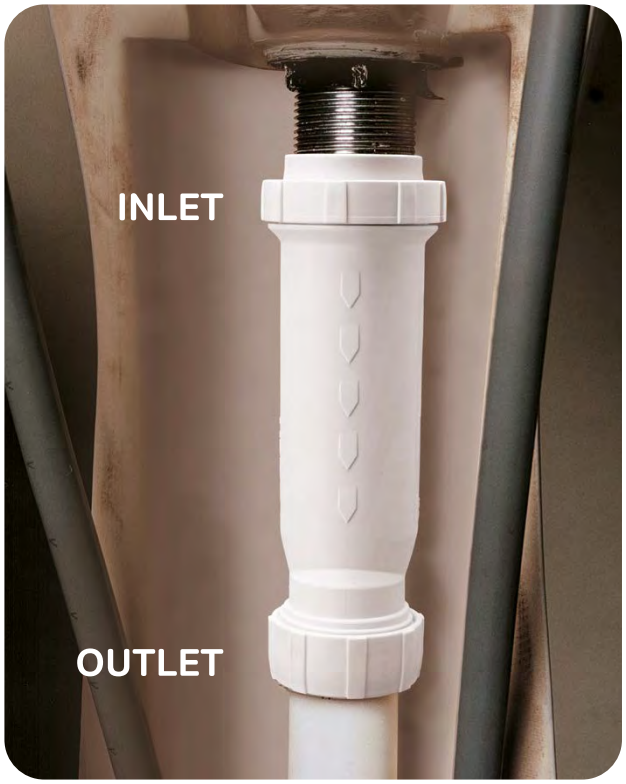

Fixing

1. Offer up the Hep$_v$O inlet to the threaded tail of the waste pipe, or Hep$_v$O knuckle or running adaptor and tighten the captive nut by hand (check that the nut screws on square and does not 'cross-thread'), hand-tight should be adequate. When the captive nut is tight, proper seating should be obtained and the Hep$_v$O body should be secure.
2. Cut the pipe to length, allowing for the full compression socket depth (preferably using an appropriate pipe cutter).
3. Remove any 'swarf' from the end of the plastic pipe. If using copper, ream the pipe end to remove any 'burr' and file if necessary, to remove any external sharp edges. Mark the socket depth on the pipe, and check that the pipe section to be jointed is free of any surface damage, which may affect the joint seal.
4. Unscrew the nut from the Hep$_v$O outlet and slide the nut and rubber seal onto the pipe.
5. Insert the pipe end fully into the socket.
6. Slide the rubber seal and screwed cap up against the face of the socket and tighten the cap sufficiently hand-tight (check that the cap is square to the body and does not 'cross-thread').
7. Flush through with water prior to first use.

DO'S

When fixed horizontally to an appliance outlet or to a sloping pipe, in order to prevent standing water and to provide a continuous fall, Hep$_v$O must be installed with the arrows on the underside.

DON'TS

Do not use any jointing compound or sealant on the Hep$_v$O inlet or outlet connections.



Hep$_v$O can be used on any waste appliance. The installation arrangement will depend on the dimensional design of the appliance and site constraints. Fig 10 shows some of the mounting options for Hep$_v$O.

If a Hep$_v$O valve is fitted horizontally, it must be installed with the direction of flow arrows underneath and a fall of around 10˚ so that waste water does not lie in the valve – see Fig 8.

Fig 9.
Hep$_v$O outlet connection

Cap nut and sealing cone on pipe end ready for insertion of pipe into compression socket.

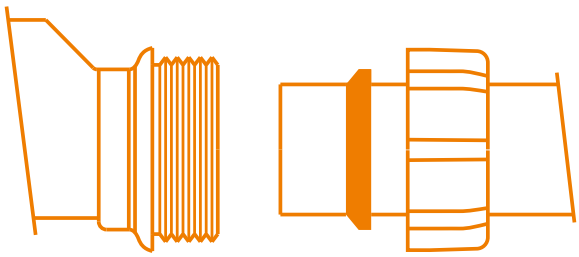

Waste piping

Waste pipes should have sufficient slope to convey the likely flow, but should not be less than 18mm/metre in accordance with BS EN 12056 Part 2. When using Hep$_v$O there is no maximum slope limitation – often a restriction applicable to single stack waste systems.

As Hep$_v$O is unaffected by siphonage or compression, combined waste piping can be used to connect more than one appliance to the stack. Fig 11 shows how Hep$_v$O can be used to simplify the plumbing to a typical bathroom.

Any branch discharge pipes serving appliances not fitted with Hep$_v$O (eg. a range of WC's) should be designed and installed in accordance with BS EN 12056 Part 2. Discharge stacks should continue to be sized, and vented where appropriate, in accordance with BS EN 12056 Part 2.

Note: Care should be taken to ensure that the underground drainage system is not completely sealed. Natural open ventilation is required at the head of each main drain run and/or at every tenth dwelling.

Hep$_v$O tundish adaptor kit BV1/21

The Hep$_v$O tundish adaptor kit BV1/21 should be installed as described below.

Unvented hot water systems must be installed by certified and qualified installers. For further guidance on this application see instruction sheet and WRc Technical note TN10321 on www.wavin.co.uk

1. Connect and correctly tighten the tundish adaptor spigot into the compression fitting outlet of the tundish (supplied by the manufacturer of the unvented hot water storage system).
2. Hand-tighten the screw thread connection of the tundish adaptor to the captive inlet nut of the Hep$_v$O.
3. Connect and hand-tighten the HepvO outlet connection to the waste pipe.

Hep$_v$O Installation

Fig 10.
Hep$_v$O mounting options

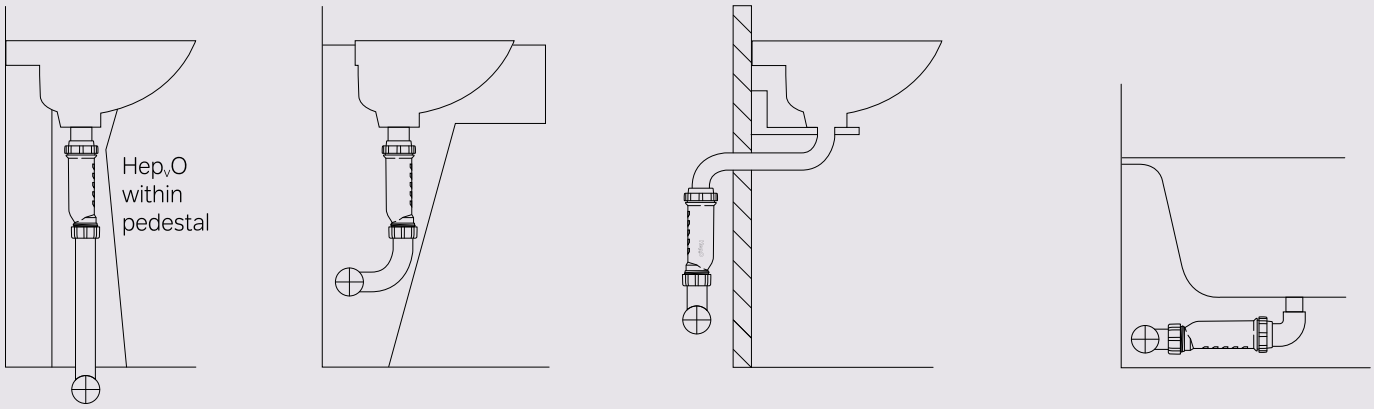

1 No. 32mm Hep$_v$O

1 No. 32mm Hep$_v$O
1 No. 32mm knuckle bend

1 No. 32mm Hep$_v$O
1 No. 32mm Hep$_v$O running adaptor
1 No. 32mm cap & lining
2 No. 32mm bends

1 No. 40mm Hep$_v$O
1 No. 40mm Hep$_v$O knuckle adaptor

Fig 11.
Hep$_v$O installation in a typical bathroom

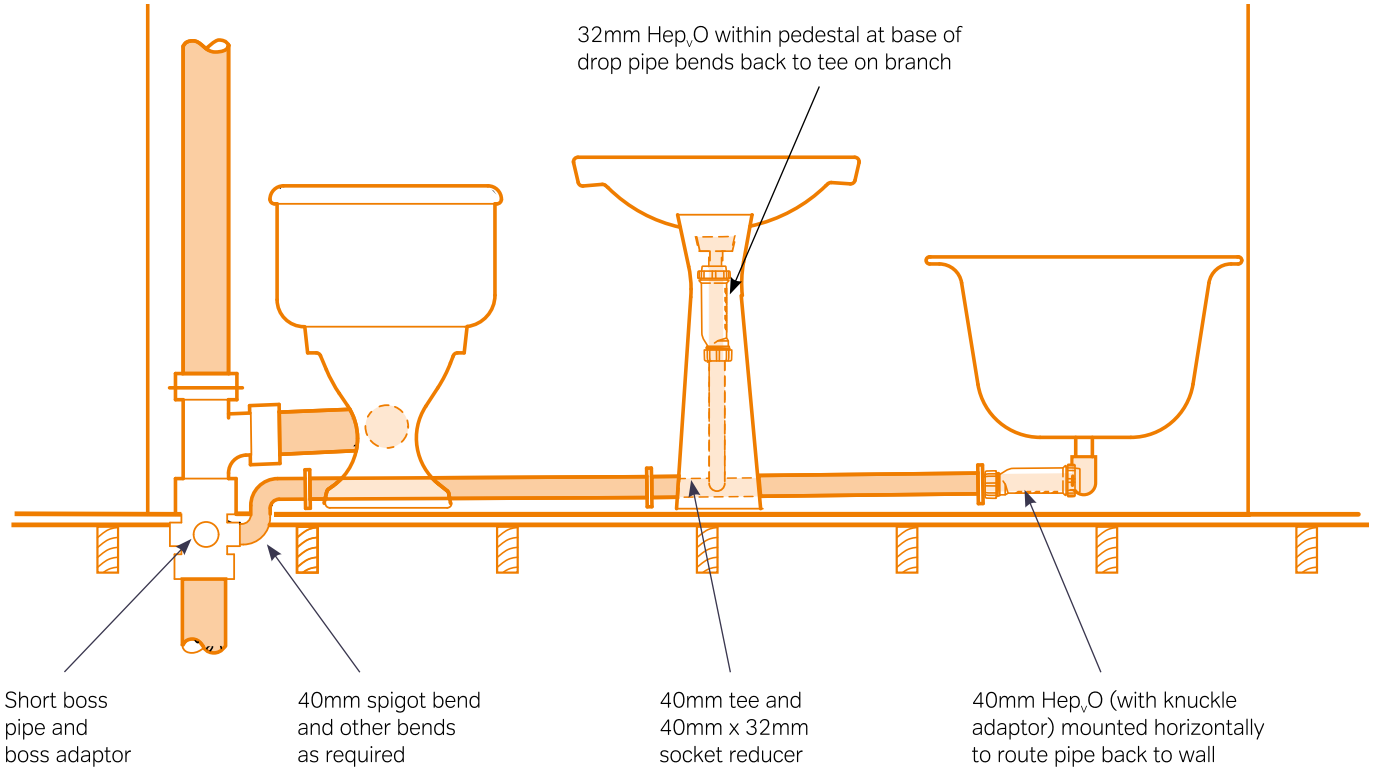

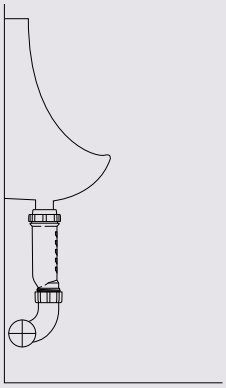

1 No. 40mm Hep$_v$O
1 No. 40mm spigot bend
Vertical installation only

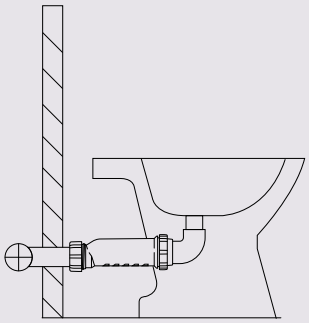

1 No. 32mm Hep$_v$O
1 No. 32mm Hep$_v$O
knuckle adaptor

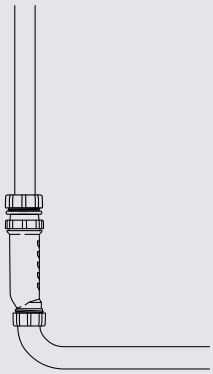

1 No. 40mm Hep$_v$O
1 No. 32mm Hep$_v$O
running adaptor
1 No. 40mm bend

Hep$_v$O Knuckle Adaptor used
to angle Hep$_v$O back to wall

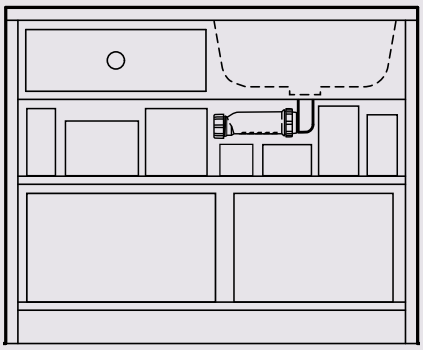

1 No. 40mm Hep$_v$O
1 No. 40mm Hep$_v$O
knuckle adaptor
2 No. 40mm bends

Condensate drainage from condensing boilers and air conditioning units

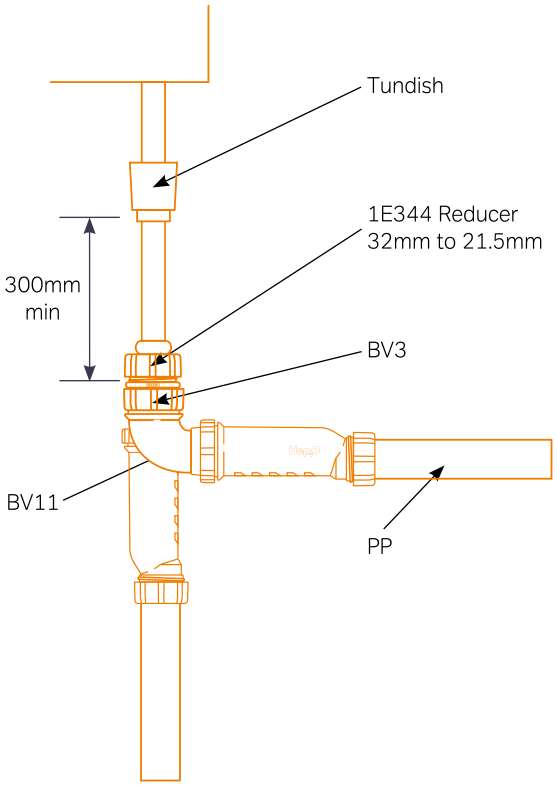

Fig 12.
Tundish adaptor kit installation on an unvented hot water storage system

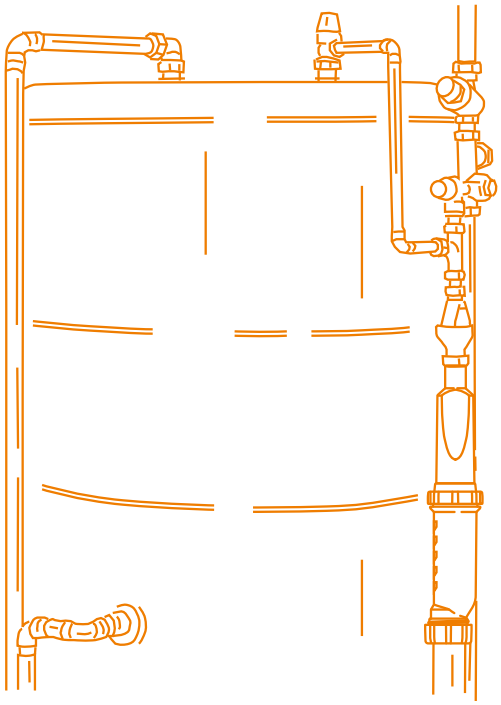

Testing and Maintenance

After installation it is recommended to flush through with warm water. Hep_VO operates as illustrated in Fig 13 below. The following tests are relevant to any sanitary installation, not just to installations where Hep_VO is incorporated.

Air tests

Sanitary installations should be air tested to 38mm water gauge for at least 3 minutes, in accordance with Building Regulations Approved Document H. Installations which incorporate Hep_VO can be tested in the normal manner, using standard test. Expanding pipe stoppers are available from the Osma below ground drainage range. Smoke producing equipment should not be used when testing plastics pipework

Water tests

Water testing the base of a discharge stack is recommended, especially where there are no appliances on the bottom storey, and where the stack is to be concealed.

Testing is normally achieved by fixing a temporary expanding pipe stopper to the drain at the base of the stack, and filling the stack with water up to the flood level of the lowest sanitary appliance (providing that the test pressure does not exceed 6 meters water gauge for soil and waste products and 4 meters water gauge for drainage products).

When performing a water test, it is recommended that the expanding pipe stopper is provided with a temporary strut (to prevent blow-out), and fitted with a drain valve

Performance tests

Sanitary installations should be tested at simultaneous design flow conditions in accordance with BS EN 12056 Part 2. Tests for self-siphonage and induced siphonage in branch discharge pipes where Hep_VO is fitted to each appliance are unnecessary.

Other branch pipes and discharge stacks should be tested in accordance with BS EN 12056 Part 2.

Blockages

If a pipe blockage occurs downstream of Hep_VO we recommend temporarily removing the Hep_VO valve before rodding the pipeline.
If the Hep_VO is rodded there is the possibility that damage to the internal components
will occur.

Cleaning

The following should be noted prior to cleaning an installation using an Hep_VO valve:

- Strong acids, e.g. cleaners containing high concentrations of sulphuric acid, must not be used on Hep_VO.
- When rodding or flushing with a sulphuric acid solution, the valve must be removed before the operation.
- Hep_VO is resistant to standard caustic based drain cleaners.

Fig 13.
Operation of Hep_VO

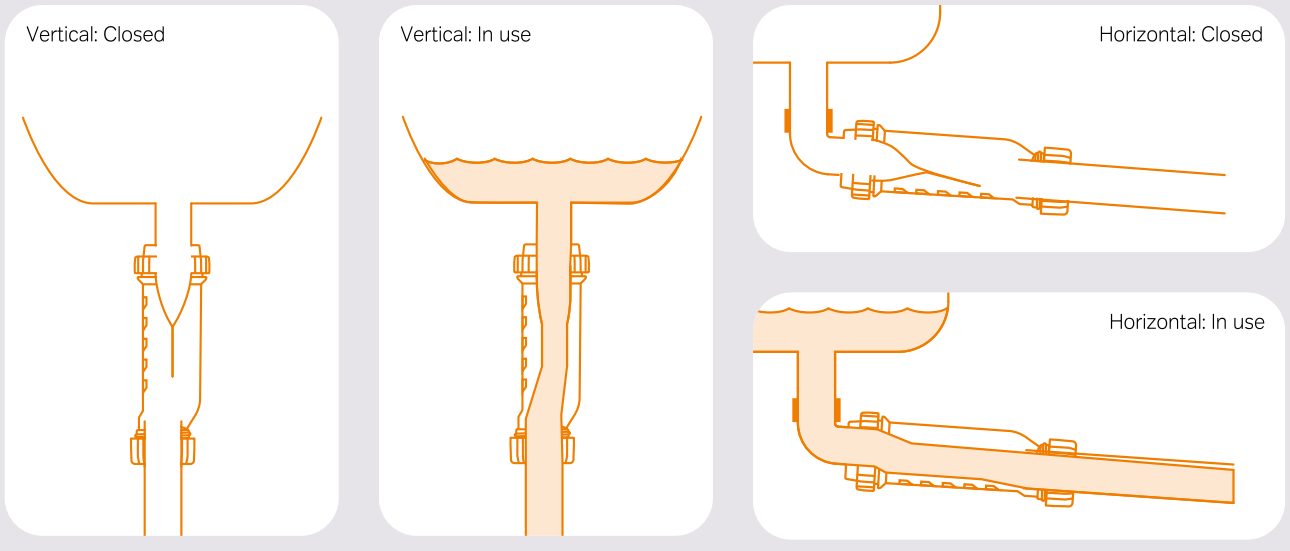

Product Selector

Hep$_V$O Hygienic Self-Sealing Waste Valve



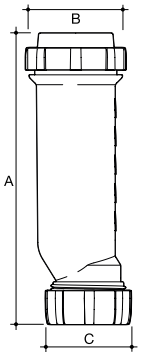

Material: Polypropylene

Nominal Size (mm)	Part Number	Colour Option	Dimensions (mm) A	B	C
32	BV1	○	181	64	56
40	CV1	○	181	64	62

Hep$_V$O Knuckle Adaptor



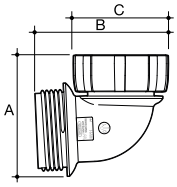

Hep$_V$O 87.5° Knuckle Adaptor

- For Horizontal applications

Material: Polypropylene

Nominal Size (mm)	Part Number	Colour Option	Dimensions (mm) A	B	C
32	BV11	○	61	69	50
40	CV11	○	67	74	55

Hep$_V$O Running Adaptor



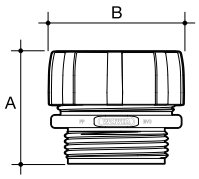

- **For installing Hep$_V$O in a pipe run**

Material: Polypropylene

Nominal Size (mm)	Part Number	Colour Option	Dimensions (mm) A	B
32	BV3	○	43	56
40	CV3	○	43	62

Hep$_V$O Tundish Adaptor



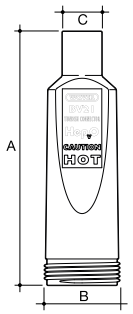

- Comprises a 32mm Hep$_V$O valve and tundish adapter.
- Dimensions given for the tundish (see BV1 for Hep$_V$O valve dimensions)
- Total length of valve with tundish installed is 315mm

Material: Polypropylene

Nominal Size (mm)	Part Number	Colour Option	Dimensions (mm) A	B	C
32	BV1/21	○	142	42	22

For installation tips see: YouTube WavinUK

Product Detail

Product detail

The Hep$_V$O valve and knuckle adaptors are available in sizes 32mm and 40mm. The Hep$_V$O tundish adaptor kit comprises a 32mm Hep$_V$O valve and tundish adaptor. A 87.5˚ knuckle adaptor should be used with the Hep$_V$O valve for horizontal applications, and a running adaptor when installed the Hep$_V$O in a pipe run. All items are manufactured from white polypropylene. Dimensional data for the Hep$_V$O is shown in Fig 14 below.

Hep$_V$O dimensional data

Fig 14.
Principle dimensions (mm)

Size	C	E	L	W	Z	H
32mm	8	172	211	217	40	73
40mm	5	172	213	219	40	74

Notes:
Dimensions are nominal and may vary slightly due to compression of the rubber seals. When fixed to a pipe, it is recommended that Hep$_V$O should remain accessible.

a) Fixed vertically directly to appliance outlet

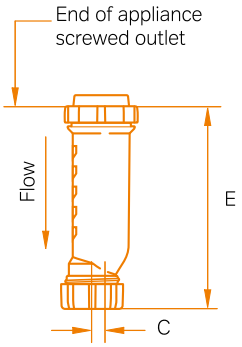

b) Fixed on a pipe at any sloping angle using running adaptor (available separately)

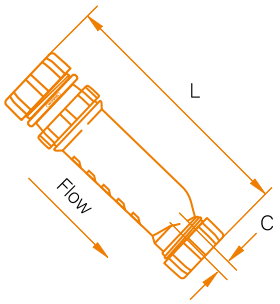

c) Fixed horizontally to appliance outlet using knuckle adaptor (available separately)

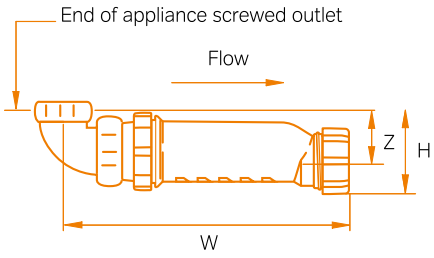

d) Fixed vertically with tundish

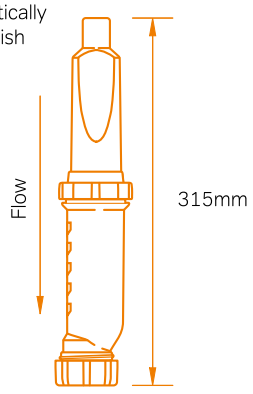

Quality, standards & approvals

All Osma branded products are manufactured under a quality management system which is approved to BS EN ISO 9001.

All Wavin manufacturing sites operate Environmental Management Systems which comply with the requirements of, and are certified to BS EN ISO 14001.

The use of Hep$_V$O, when installed in accordance with manufacturers recommendations, will ensure that installations comply with the requirements of BS EN 12056 Part 2 Code of Practice for Sanitary Pipework, and Document H of the Building Regulations 2002 'Drainage and Waste Disposal, with respect to seal integrity.

Hep$_V$O functions without the use of water and complies with all other relevant functional requirements of BS EN 274: Specification for Plastics Waste Traps.

Hep$_V$O also complies with BS EN 15749-1 2004 Ships and Marine Technology – drainage systems on ships and marine structures.

Hep$_V$O is kitemarked to ATS 5200-047:2005 (KM 618560): Technical Specification for plumbing and drainage products - Self-sealing devices

Test results indicate that the Hep$_V$O valve has a life expectancy at least equivalent to current water sealed traps.

ATS 5200-047:2005

General Information

Further Information on Hep$_V$O

For more information on specific application areas, please refer to the WRc information leaflets. Available to download from **www.wavin.co.uk**

Scan the QR code below for further information.

Wavin Blog

Keep ahead of breaking news with a fresh and insightful look into the construction industry. Our aim is to keep you informed and up to date with the latest how-to guides, regulations, innovation and more. Visit: **blog.wavin.co.uk**

Training

Develop your knowledge and keep up to date with our range of CPD presentations and online e-learning modules. Visit: **wavin.co.uk**

'How to' videos

To accompany this brochure, there is a set of installation 'how to' Osma Hep$_V$O videos. They can be viewed at: **www.youtube.com/WavinUK** under the Osma Hep$_V$O playlist.

- Waterless Trap System Overview
- Fitting pedestal basin waste in limited space situations
- Installing under a sink where space is at a premium
- Fitting a bath waste where depth is limited

In addition, you can also find other Wavin videos on the channel for Osma Soil and Waste, Osma Rainwater, Hep$_2$O Plumbing and Underfloor heating and more.







wavin

orbia

Wavin is part of Orbia, a community of companies working together to tackle some of the world's most complex challenges. We are bound by a common purpose: To Advance Life Around the World.

Orbia's Building and Infrastructure business Wavin is an innovative solutions provider for the global building and infrastructure industry. Backed by more than 60 years of product development experience, Wavin is advancing life around the world by building healthy, sustainable environments for global citizens. Whether it's to improve the distribution of clean drinking water, to make sanitation accessible for everyone, to create climate resilient cities, or to design comfortable living spaces, Wavin collaborates with municipal leaders, engineers, contractors, and installers to help future-proof communities, buildings and homes. Wavin has 12,000+ employees around 65 production sites worldwide, serving over 80 countries through a global sales and distribution network.

Wavin Limited | Edlington Lane | Doncaster | DN12 1BY
Tel. 0800 038 0088 | Web. www.wavin.co.uk | E-mail info@wavin.co.uk

© 2026 Wavin Wavin reserves the right to make alterations without prior notice. Due to continuous product development, changes in technical specifications may change. Installation must comply with the installation instructions.

November 2026